KS3020,1,2,3,7,8NX
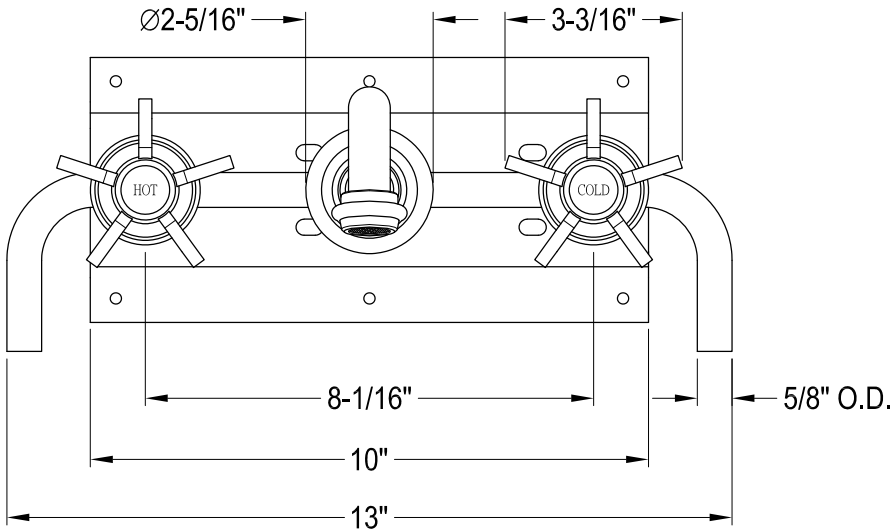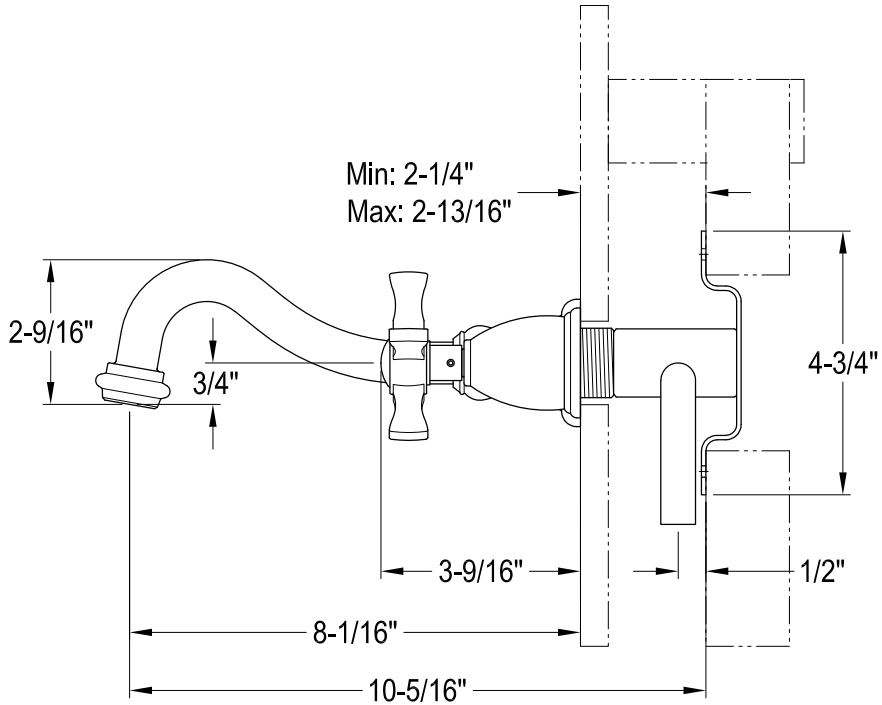
Twin Handles Wall Mount Tub Filler